**KOLZ, A. L. and R. E. JOHNSON.** 1997. In-water electroshock techniques to repel aquatic mammals and birds. Pages 203-215 *in* Mason, J. R., editor. Repellents in Wildlife Management (August 8-10, 1995, Denver, CO). USDA, National Wildlife Research Center, Fort Collins, CO.

**18**

# In-Water Electroshock Techniques to Repel Aquatic Mammals and Birds

**A. Lawrence Kolz**, U.S. Department of Agriculture, Denver Wildlife Research Center, Building 16, Denver Federal Center, P.O. Box 25266, Denver, CO 80225-0266

**Richard E. Johnson**, U.S. Department of Agriculture, Denver Wildlife Research Center, Building 16, Denver Federal Center, P.O. Box 25266, Denver, CO 80225-0266

## ABSTRACT

Nonlethal electroshocking devices have been developed at the Denver Wildlife Research Center for repelling aquatic mammals and birds from selected areas. These devices are augmented with infrared motion sensors to turn on the apparatus only when warm-blooded animals are present, thereby conserving electrical energy and allowing battery operation. Electronic safety controls are incorporated to prevent animals from being over-exposed or repeatedly exposed to the electrical fields. The technical basis for this equipment is based upon research originally reported in the electrofishing literature. Obviously, any animal immersed in water is highly susceptible to electrical shock, but permanent injury can be avoided by controlling the intensity of the electrical energy. As the intensity of the electrical field is increased, the severity of the electrical shock experienced by an animal is known to progress through several stages including mild irritation, extreme agitation, electronarcosis (an unconscious state), tetany (characterized by muscular rigidity), and death. Fortunately, with proper engineering, in-water electroshocking apparatus can be designed to limit the degree of electrical shock to the desired threshold. Additionally, controlled studies with fish provide evidence that there is a predictable relationship between the intensity of the electrical shock and the magnitude of the electrical power transferred from the water into the fish. By applying this electrical model and measuring the electrical conductivity of the water, it should be possible to predict the level of electrical power density required in the water to elicit a particular electroshock response.

## KEY WORDS

*Electrical shock, electroshock, electricity, frightening devices, electrical repellent, shock*

## INTRODUCTION

It is often desirable to repel aquatic mammals and birds from agricultural crops, recreational parks, controlled waterways, fish-rearing facilities, and scenic areas without causing permanent injury to the animals. The possibility of using electrical shock as a control measure offers many advantages: there are no environmental contaminants, the animals never acclimate to the stimuli, and the devices can be easily deactivated. In some instances, standard livestock fence chargers have been installed to control aquatic animals by stretching wires around and above ponds and ditches. However, these wired systems have generally been unsatisfactory because water levels fluctuate and make it impossible to maintain the close water-to-wire tolerances that are required. These wires also impede the movement of personnel. An alternate method for delivering an electrical shock to an aquatic animal is to actually electrify the water.

Fishery biologists have applied electricity to water to capture fish for over a hundred years (original English patent issued to Isham Baggs in 1863), and the literature is replete with electrofishing techniques and concepts (Snyder 1992). Fortunately, the same electrical principles that allow us to capture fish apply in the design of equipment to repulse aquatic animals; however, the desired effects are quite different. When fishing with electricity, the captured fish are normally totally immobilized. In contrast, when using electricity to repel a warm-blooded animal, the animal must remain responsive and be able to move away from the stimuli. Research conducted with fish has shown it possible to adjust the electrical power in the water to accommodate different electroshock responses because the phenomenon is progressive (Sternin et al. 1976). The severity of an electrical shock is actually proportional to the applied power, and the physiological effects increase incrementally from mild irritation to extreme agitation, electronarcosis (the stun response used to capture fish), tetany, and finally death.

An obvious concern when using electricity in a water environment is safety—both for the animal being shocked and for personnel occupying the area. Obviously, any animal immersed in water is highly susceptible to the lethal effects of electricity, and safeguards must be taken to ensure that the magnitude of the electrical power transmitted through the water does not stun or cause injury. The prototype devices being tested at the Denver Wildlife Research Center (DWRC) have several safety features to avoid these adverse effects.

## APPLYING ELECTRICITY TO WATER

Electrical power can be applied to a volume of water by simply immersing energized electrodes into the water. These electrodes function as the transducers that cause electrical energy to be distributed through the water and create a three-dimensional electrical field. This energy is distributed in a nonhomogeneous manner with the highest intensities being in close proximity to the electrodes (Seidel and Klima 1974). In designing a control for aquatic warm-blooded animals, it is more efficient if the electrical energy can be distributed near the surface of the water rather than at depth, and cylindrical shaped electrodes, oriented vertically in the water, favor this distribution. The combination of size, geometric configuration, and electrode placement controls the basic shape of an electrical field; however, in-water objects such as rocks, metal pipes, or

subsurface substrates with high or low electrical conductivities can alter the characteristics of the field.

The application of electricity to a volume of water should only be considered as a localized control measure; it is simply too expensive and wasteful of power to electrify a large volume. However, the effective coverage of a single, low-power, electroshocking device can be expanded by placing multiple electrodes in the water and using electronic timers to sequentially switch between them. Because animals respond so quickly to electroshock and flee from the stimulation, the time requiredåto repel animal from any givenpair of electroes is only a few seconds.

## ELECTRICAL PRINCIPLES IN THE WATER

Common electrical circuits involve wired components that are driven by alternating current (AC; e.g., 110 V household) or direct current (DC; e.g., batteries) power sources. For these circuits, electrical measurements are easily made by physically connecting meters to the wires and components. Such is not the case when the electrical circuit is a three- dimensional volume of water: there are no wires or components.

Understanding the electrical characteristics of an electric field in water requires concepts that involve the measurement of voltage, current, and power at specific locations in a three-dimensional media. The three electrical variables necessary to describe an electrical field in water are voltage gradient, current density, and power density. These parameters can be associated with a small cube of water that can be imagined to exist in a volume of water (Figure 1). The voltage gradient is the voltage measured between opposite surfaces of the cube and has the units of V/cm. Current density indicates the number of electrical charge carriers passing through a surface of the cube and is measured in amperes per $cm^2$. The third parameter, power density in watts per $cm^3$, is the power dissipated in the cube. The electrical energy applied to water is dissipated in the form of heat, and it should be noted that even a small stream of water is an effective heat sink.

Graphic displays for any of the three electrical parameters can be measured and plotted for a given electrode configuration to produce a visual interpretation of an electrical field (Novotny and Priegel 1974). The resultant map is similar to a topographic contour map except that the lines represent the particular electrical characteristic rather than ground elevations, and the spacing between the lines shows the relative intensity of the electricity. From these maps, it is possible to estimate the area of coverage for an electrode array and to adjust the intensity of the field to appropriate levels.

There is yet a fourth electrical parameter that must be considered: electrical conductivity (Corcoran 1954). The electrical conductivity, with units of Siemens per cm or mhos per cm, is a measure of the ionic content of the water and determines how readily the water conducts electricity. Pure water has low ionic concentrations and is not a good electrical conductor, while sea water is quite the opposite. It is not possible to judge the conductivity of water by simply looking for suspended particles; colored or muddy water does not necessarily mean it has a high ion content. Fortunately, economical water conductivity meters are readily available from

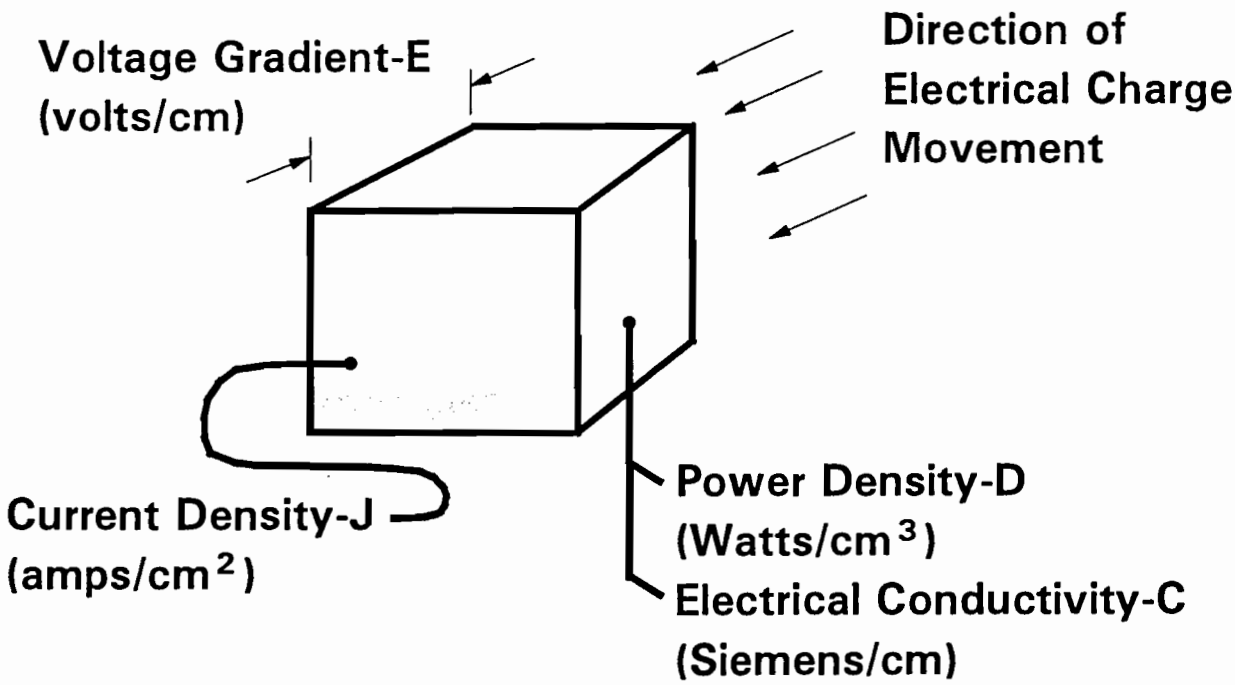


**FIGURE 1.** Depiction of electrical parameters in water.

instrument suppliers. Conductivity readings should always be taken when installing in-water electroshocking devices (Reynolds, In Press).

A single graph (Figure 2), representing a solution of various electronic equations, simultaneously shows the relationships of the four electrical parameters: voltage gradient, current density, power density, and electrical conductivity (Kolz 1989). Each parameter on the graph is presented on a logarithmic scale. Knowledge of any two of the four possible electrical parameters determines a unique location on this graph, and this allows the values for the other two parameters to be read directly without any calculations. For example, if the water in a pond has a conductivity of 100 microsiemens/cm ($\mu$S/cm) and the voltage gradient near an electrode is

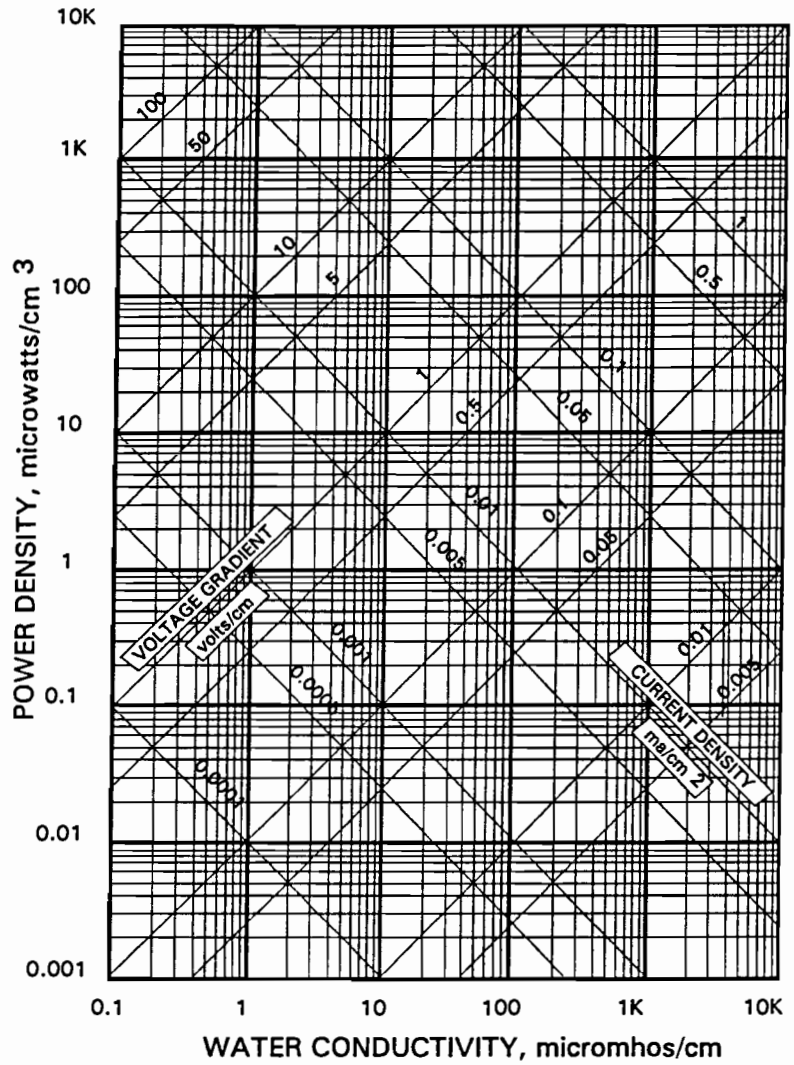


**FIGURE 2.** Relation of power density, water conductivity, voltage gradient, and current density (mA = milliampere; k = 1,000).

measured to be 1 V/cm, the graph shows that the corresponding current density is 0.1 milliampere/cm$^2$ and the power density is 100 microwatts/cm$^3$. In practice, electrical conductivity and voltage gradient are the easiest parameters to measure (Kolz 1993).

## SELECTION OF THE DESIGN CRITERIA FOR ELECTRICAL PARAMETERS

Research conducted by Kolz and Reynolds (1989) verified that goldfish *(Carassius auratus)* respond to electrical shock in a manner consistent with the magnitude of *in vivo* power density and independent of the conductivity of the water in which the fish are swimming. Various thresholds

of electroshock were reported under controlled conditions, and these thresholds were successfully correlated against a theoretical electrophysiological model. When plotted on a parametric graph similar to Figure 2, the threshold responses formed the "U"-shaped curves predicted from the model (Kolz and Reynolds 1990). Based upon this research and other unpublished findings, we are using an area between response curves as the design criteria for the in-water electrical parameters to develop nonlethal electroshocking devices for aquatic mammals and birds (Figure 3). It can be argued that mammals and birds may not respond to electrical shock at the same power levels as fish, and this is certainly a valid concern and a topic for future research. Unfortunately, there are no published data, and we have no facilities to measure the effects of electrical currents on birds and mammals in aquatic environments. We have based our judgments on the best information available derived from experiments with fish. Additional support comes from experienced electrofishing personnel and their comments that no serious or lethal injuries have been observed to the ducks, geese, beaver, muskrats, or nutria that have been inadvertently shocked at the power levels normally used for fish.

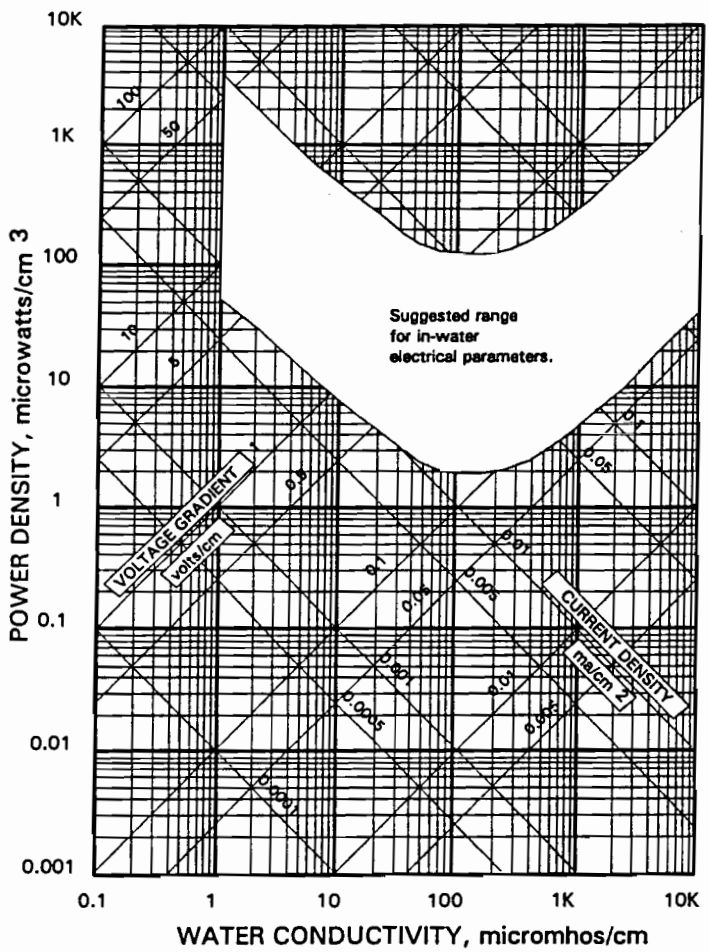


**FIGURE 3.** Nonlethal design criteria for repelling aquatic mammals and birds with electroshock.

## OPERATIONAL DESCRIPTION

The electroshocking prototypes under test at the DWRC are designed for field operations where the devices must be hand-carried or backpacked into remote sites and set up by an animal control specialist in a manner similar to traps, snares, or other control devices that are commonly deployed. This maneuverability necessarily dictates a limited size and weight. Certain components are required to build our electroshocking device (Figure 4), and most of these are commercially available (Table 1).

### Electrical Design

The power supply for the electroshocking device is a 12-V rechargeable battery. This battery drives a 120-V AC inverter that is controlled by a combination of manual, infrared, optical, and timing circuits. At least two electrodes are wired directly to the output of the AC inverter and provide the interface to the water. There are no controls offered to adjust for voltage or power, and the prototypes are limited to 200 watts (W). The amount of power actually dissipated in the electrical field is regulated by the electrical conductivity of the water, the number of electrodes, and the desired area of coverage. All the components are packaged in a watertight metal container, measuring 30 × 16 × 19 cm, with a total weight of 8.1 kg.

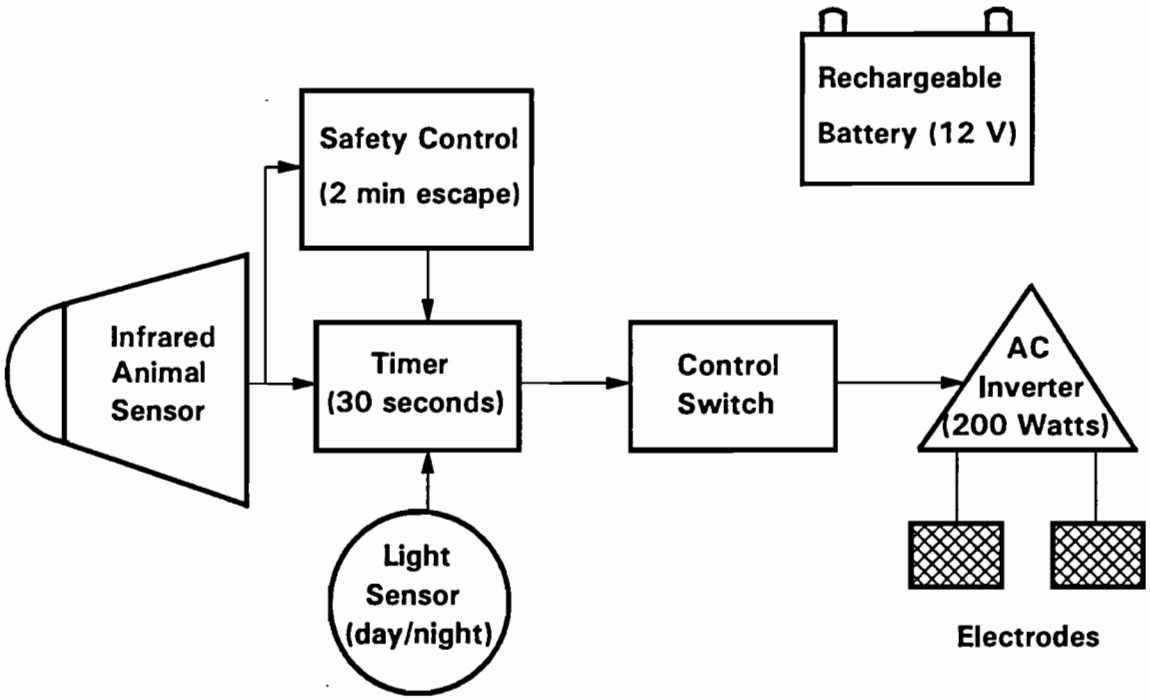


**FIGURE 4.** Components required to build an electroshocking device for aquatic mammals and birds.

**Table 1. Components for DWRC Electroshocking Device**

| Component | Manufacturer[a] |
|---|---|
| 1. Rechargeable Battery | Gates Energy Products, Inc. |
| Model 0840-0115AJ | Denver, CO 80217 |
| 2. DC to AC Inverter | Power Star Products, Inc. |
| Model POW-200 | Cupertino, CA 95014 |
| 3. Infrared Detector | Visonics, LTD (USA) |
| Model SRN 2000C/PC | Bloomfield, CT 06002 |

[a] Reference to trade names does not imply endorsement of commercial products by the Federal Government.

## Power Supply

Various types of rechargeable batteries, including nickel-cadmium, lead-acid, and alkaline, are available to operate electroshocking devices. The lead-acid gel cell we used had a capacity of 12.5 amp-hr and provided about 80 electroshocking cycles when fully charged. Solar panels can obviously be added to recharge the battery in sunlight and increase the number of operating cycles, or larger batteries are readily available. During a field study designed to repel beaver, which are primarily nocturnal animals, we discovered the batteries being depleted by ducks. This problem was circumvented by adding a photoresistor to prevent the equipment from activating in the daylight when the ducks were present; the same concept could be reversed to operate the equipment only during the daylight. We may also add a voltage sensor to protect the batteries from being damaged by over-discharging.

## Electrical Waveforms

The AC waveform produced by the inverter is a highly distorted 60-Hz sinewave having a root-mean-square voltage of about 110 V. This means that the actual peak-to-peak voltage applied to the water is approximately 310 V. Research with fish has shown that the alternating polarities associated with AC waveforms create a more intense electroshocking effect than DC waveforms operating at the same peak voltage. For a maximum repellent effect against aquatic animals, we consider the use of AC waveforms appropriate, and there is the added advantage that these electrical systems are the simplest to build. However, when operating in high conductivity water, the battery capacity of a portable system may be exceeded because of the high power requirements necessary to generate a continuous sinewave. An alternative is to modify the AC waveform with

appropriate filter circuits to reduce the average power while maintaining the same peak voltage in the water. For example, if a sinewave is rectified with diodes to generate a half-sinewave, the average power is reduced by one-half, but the peak voltage is not changed (Novotny 1990).

## Safety

Two paramount safety objectives should always be assured when applying in-water electroshocking techniques: minimize the time that an animal is exposed to the electrical field and never let the animal actually touch an electrode. To achieve these goals, physical barriers, electronic timing circuits, and motion sensors are designed into the DWRC prototypes.

In-water electroshocking is based on electrical principles that require the electrical charge to be delivered to the animal through the water. Should an animal accidentally make physical contact with a metal electrode, the animal becomes directly "wired" to the power source and is subject to possible electrocution. To prevent any physical contact with the electrodes, we use physical barriers in the form of nonconductive plastic cages to surround the electrodes (Figure 5). Ideally, these cages are perforated with large openings to minimize the distortion to the electric field, but small enough to prevent an animal from sticking a nose or paw through a hole to touch an electrode. The physical strength of these cages should withstand the weight and kicking of an animal under the duress of electrical shock.

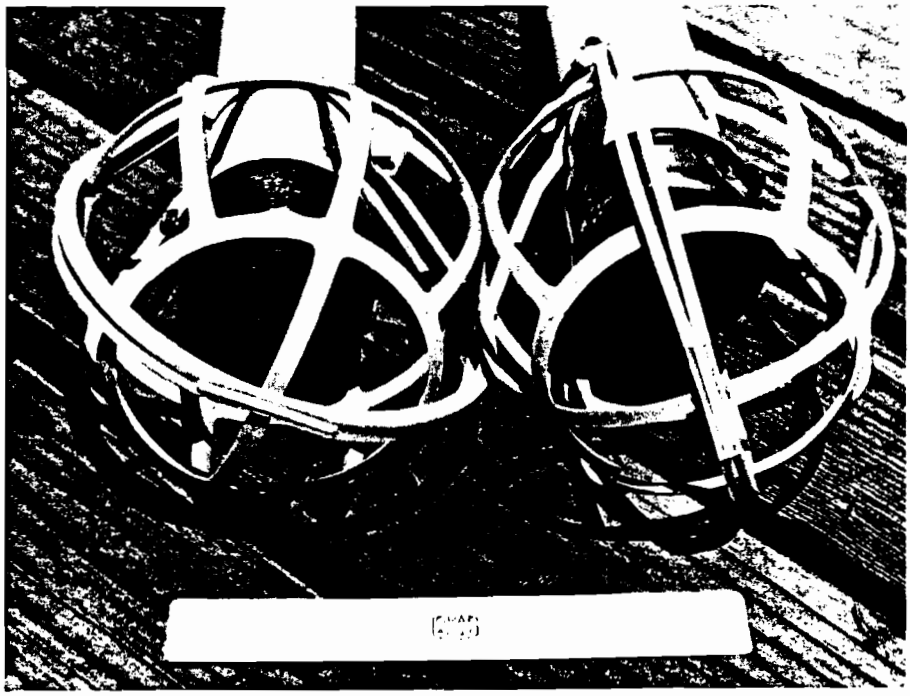

**FIGURE 5.** Pair of copper electrodes surrounded by a protective plastic cage.

The prototypes are designed with infrared controls, and the body heat from a warm-blooded animal must be detected for activation. Fish or other cold-blooded animals cannot turn on the mechanism. In this manner, energy is present in the water only when needed, and the battery is conserved. The infrared sensors also allow for the incorporation of three safety features. First, the sensor triggers timing circuits that energize the electric field for only 30 sec, and this ensures that animals are never exposed to the electrical shock for an extended period. This activation time is judged adequate for any healthy animal to be repelled from the controlled area. Following this 30 sec, a delayed reset is activated as an additional safeguard for another 2 min. This added time should allow even a confused or injured animal time to move away. And finally, the electronic control has an interlock to disable the reactivation of the device indefinitely until all motion in the field of view of the infrared sensor ceases for a 2-min period.

### Installation

The prototype units were mounted on a tripod so the infrared sensor could be easily directed (Figure 6). The horizontal field of view of the sensors is 90 degrees, and the detection range is greater than 10 m. The electrodes can be placed in the water anywhere within this zone of coverage. Each electrode can be considered to have an individual electroshocking radius of 1 to 2 m, depending on the size of the electrodes and conductivity of the water. As a rule of thumb, electrodes with larger surface areas energize larger volumes of water but require more power. When working in either high (greater than 800 $\mu$S/cm) or low (less than 100 $\mu$S/cm) water conductivity, it is usually necessary to use smaller electrodes to compensate for the voltage and power limitations of battery-operated equipment. The distance between electrodes is not critical except when they are brought too close together and the electrical fields begin to overlap and essentially short-circuit the power source. Separating the electrodes to a distance beyond their individually effective electroshocking radii will cause a void in the area of coverage, but the equipment will continue to operate properly. For the latter situation, a single pair of electrodes may actually be used to control two separated areas. Once the electrodes are installed at a control site, voltage gradient measurements can be taken with a gradient probe to determine the expanse and intensity of the electrical field. There are so many variables to consider for field installations that on-site, in-water measurements should be recorded.

## RESULTS

Pilot studies conducted to monitor the electroshock responses of beaver, ducks, and geese are encouraging, but no equipment has yet been provided to animal damage field specialists. We anticipate funding for these field activities and personnel training in 1996.

### Reactions of Beaver

The Jefferson County School District in Lakewood, CO, allowed an electroshocking device to be installed at a beaver damage site located on their property. The site consisted of three beaver

**FIGURE 6.** In-water electroshocking device installed to protect a breach in a beaver dam.

dams with one of the water impoundments flooding a driveway and parking lot. The dam for this pond was breached, and the electroshocking device was installed in the opened channel (Figure 6).

Almost every morning that the device was operational, there was evidence that beaver had visited the site during the previous night. Normally, there would be fresh tracks near the control device and loose willows, sticks, or reeds floating in the water. The beaver were bringing materials to rebuild the dam, but the electroshock prevented access; the dam remained breached. However, on those nights when we turned off the device, the beavers rebuilt their dam. Obviously, the nonlethal control worked, but the animals did not associate any aversion with the experience. In fact, the beaver continued to cut trees and work in the immediate area of the devices even on those nights when they had obviously been shocked. After completing our initial

studies, the school district requested that we return and keep the devices in place until the area had dried sufficiently for heavy equipment to remove the dam.

### Reactions of Ducks and Geese

An area measuring about 2 × 4 m was arbitrarily selected in a pond located at the Denver Federal Center in Denver, CO, to record video tapes and study the behavior and reactions of mallard ducks *(Anas platyrhynchos)* and Canada geese *(Branta canadensis)* to electroshock. After initiating this study, we immediately discovered a design flaw in our equipment: aquatic birds radiate less infrared energy than beaver. Subsequently, a more sensitive detector was installed.

The ducks and geese generally responded to the electroshock with a great deal of noise and immediate flight when the weather was warm. However, in freezing temperatures when the pond was almost entirely covered with ice, the birds would sometimes paddle rapidly out of the electrical field but remain on the pond. With geese, if only one member of a family was shocked and took to flight, the entire family would normally respond by leaving the area. At no time were birds observed loitering in the controlled area.

## DISCUSSION

Public opinion can influence the acceptance of wildlife damage control methods, including in-water electroshocking devices. From the time we are small children, we are advised of the hazards of electricity around water. This attitude and inherent caution was most evident, even among electrical engineers, when the safety standards for electrofishing practices were first addressed in the 1980's. Some of the initial regulations were so cautious as to make the equipment impractical. Certainly, in-water electroshocking does present dangers that are unusual and not to be discounted; but with proper precautions in the design of equipment, proper selection of control sites, proper installation of warning signs, and proper training of personnel, most of these hazards can be greatly reduced or eliminated.

The positive results of the pilot studies conducted with the in-water electroshocking apparatus are an impetus to further development of this technology. The prototypes tested at the DWRC are judged to be rudimentary and simple, but the electronics hardware required to build these devices is not complicated. With the exception of the control circuits, the major components are commercially available. It is also fortunate that the electrofishing literature already provides the technical basis for the approach. Perhaps the most encouraging incentive to further the development of this methodology is to recognize that the application is nonchemical, nondestructive to the environment, and nonlethal to the animals. There are strong sociopolitical pressures to develop wildlife damage control methods with these characteristics.

## LITERATURE CITED

Corcoran, G. F. 1954. Basic Electrical Engineering. John Wiley & Sons, Inc., NY. 449 pp.

Kolz, A. L. 1989. A power transfer theory for electrofishing. Pages 1–11 *in* Electrofishing, a power related phenomenon. U.S. Fish. Wildl. Serv. Fish Wildl. Tech. Rep. 22.

———. 1993. In-water electrical measurements for evaluating electrofishing systems. U.S. Fish Wildl. Serv. Biol. Rep. 11.

———, and J. B. Reynolds. 1989. Determination of power threshold response curves. Pages 15–24 *in* Electrofishing, a power related phenomenon. U.S. Fish. Wildl. Serv. Fish Wildl. Tech. Rep. 22.

———, and ———. 1990. A power threshold method for the estimation of fish conductivity. Pages 5–9 *in* I. G. Cowx, ed. Developments in Electric Fishing. Blackwell Scientific Publications, Cambridge, MA.

Novotny, D. W. 1990. Electric fishing apparatus and electric fields. Pages 34–88 *in* I. G. Cowx and P. Lamarque, eds. Fishing with electricity, applications in freshwater fisheries management. Fishing News Books, Blackwell Scientific Publications, Ltd., Oxford, England.

———, and G. R. Priegel. 1974. Electrofishing boats: improved designs and operational guidelines to increase the effectiveness of boom shockers. Wis. Dep. Nat. Resour. Tech. Bull. 73, Madison, WI.

Reynolds, J. B. 1996. Electrofishing. Pages 221-253 *in* B. R. Murphy and D. W. Willis, eds. Fisheries techniques. American Fisheries Society, Bethesda, MD.

Seidel, W. R., and E. F. Klima. 1974. In situ experiments with coastal pelagic fishes to establish design criteria for electrical fish harvesting system. U.S. Natl. Mar. Fish Serv. Fish. Bull. 72:657–669.

Snyder, D. E. 1992. Impacts of electrofishing on fish. Prepared for U.S. Department of Interior, Bureau of Reclamation and Glen Canyon Environmental Studies Team, Aquatic Coordination Team, Fort Collins, CO.

Sternin, V. G., I. V. Nikonorov, and Y. K. Bumeister. 1976. Electrical fishing, theory and practice [English translation of Sternin et al. 1972 from Russian by E. Vilim]. Israel Program for Scientific Translations, Keter Publishing House Jerusalem Ltd, Jerusalem.