J. Field Ornithol., 64(2):239-243

PENTAGON MILK-CARTON NEST BOX

PATRICIA A. POCHOP[1] AND RON J. JOHNSON[2]
Department of Forestry, Fisheries and Wildlife
202 Natural Resources Hall
Lincoln, Nebraska 68583-0819 USA

Abstract.—A pentagon-shaped nest box made from four one-half-gallon milk cartons is described. Two cartons for interior walls and two for exterior walls were appropriately cut and assembled using staples and duct tape. None of 206 boxes used for House Sparrows (*Passer domesticus*) through one nesting season (7 mo), and only eight of 120 boxes used through two nesting seasons and the intervening winter (19 mo), required replacement. About 35% required minor retaping each year. This inexpensive box was readily accepted by House Sparrows, withstood considerable weather extremes, and appears well-suited for field studies of House Sparrows and possibly other cavity-nesting birds.

CAJA DE ANIDAMIENTO PENTAGONAL CONSTRUÍDA CON EL CARTÓN DE ENVASES PARA LECHE

Sinopsis.—Se describe una caja de anidamiento pentagonal, construída con el cartón de envases para leche con capacidad para medio galón. Dos cartones para las paredes interiores y dos para las exteriores fueron cortadas y ensambladas adecuadamente utilizando presillas y cinta adhesiva. Ninguna de las 206 cajas utilizadas por una temporada de anidamiento (7 meses), por parte de individuos de *Passer domesticus*, requirió remplazamiento y sólo ocho de 120 tuvieron que ser remplazadas al ser utilizadas por dos temporadas de anidamiento (19 meses). Aproximadamente un 35% de las cajas requirieron reparaciones menores con cinta adhesiva al año de ser colocadas. Estas cajas, las cuales son de bajo costo, fueron muy bien aceptadas por los gorriones y resistieron adecuadamente condiciones ambientales extremas. Estas parecen muy apropiadas para estudios de campo de gorriones y probablemente de otras aves que anidan en cavidades.

Nest boxes often are used when studying cavity-nesting birds. Variables such as cavity size, density and placement (e.g., site, height, exposure) can be controlled to ease researcher access to nests. During a study of House Sparrows (*Passer domesticus*), we wanted a nest box that was inexpensive and easy to make, yet highly attractive to House Sparrows. Attractiveness was important because some other studies reported low (<45%) House Sparrow acceptance of boxes (Ivanov 1987, North 1973, Salaet and Cordero 1988). A previous study of Prothonotary Warblers (*Protonotaria citrea*) used nest boxes made from two one-half-gallon milk cartons (Fleming and Petit 1986). House Sparrows might prefer a larger nest box, however, because they are slightly larger than warblers and build bulky nests. A nest evaluation study found that House Sparrows, although highly adaptable in using available cavity sites, apparently prefer cavities with ample space, possibly because of nest size influences on microclimate in the nest, length of the entrance passageway, or other factors (Indykiewicz 1990). Thus, we modified the two-carton design into

[1] *Current address: USDA/APHIS/ADC, Denver Wildlife Research Center, Building 16, P.O. Box 25266, Denver Federal Center, Denver, Colorado 80225 USA.*
[2] *To whom correspondence may be addressed.*

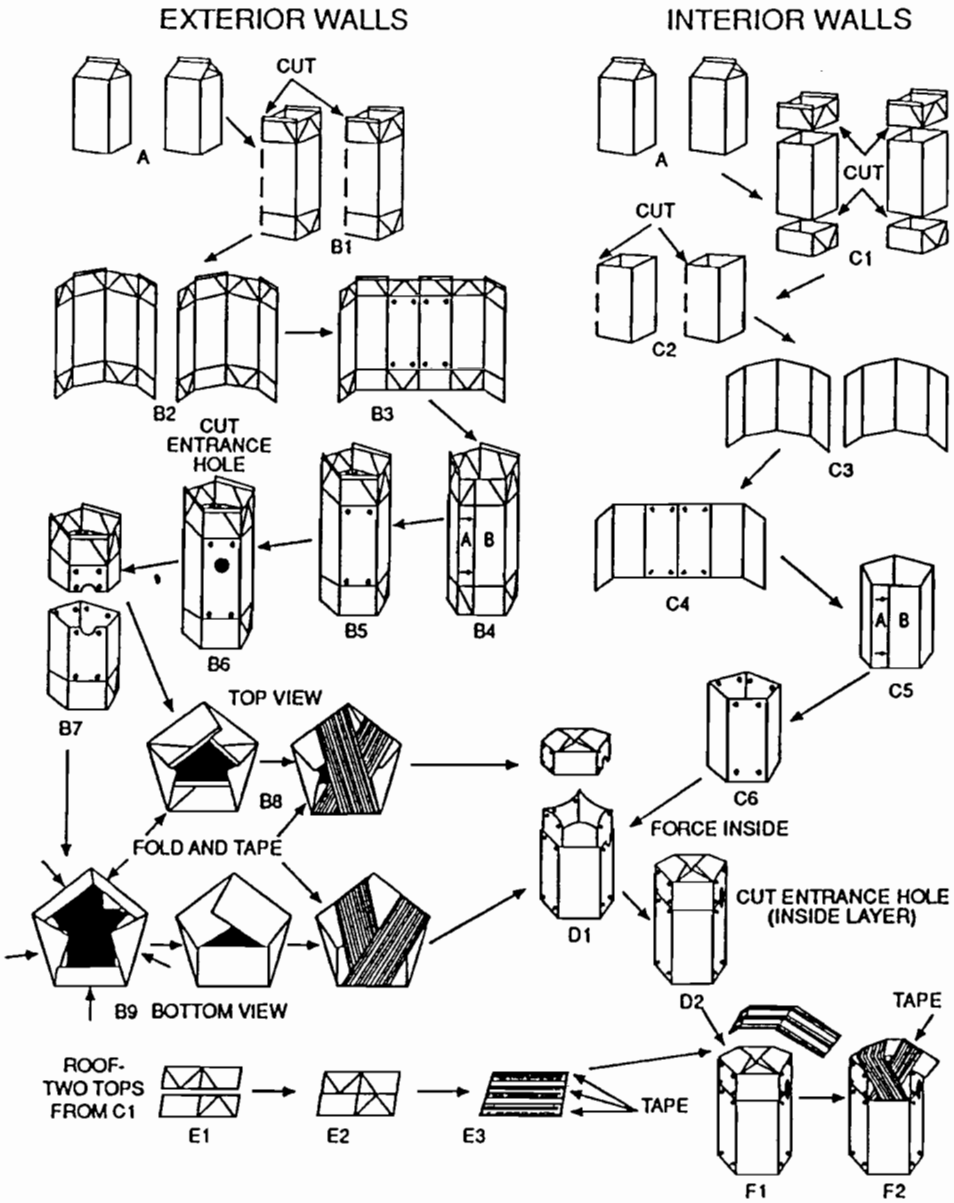

FIGURE 1. Construction of a pentagon-shaped nest box using four milk cartons, two for exterior walls, and two for interior walls. All folding is done on existing milk-carton fold lines. Dots (·) in B3, B5, B7, C4, and C6 indicate staple points. The center of the entrance hole (B6, D2) is 6 cm below the top of the carton side, the place where the carton top normally folds. Folding the bottom inward (B9) forms a base and three interior triangular tabs, which are pushed upwards and between the interior and exterior walls (D1). This provides a flat and more stable nest box bottom.

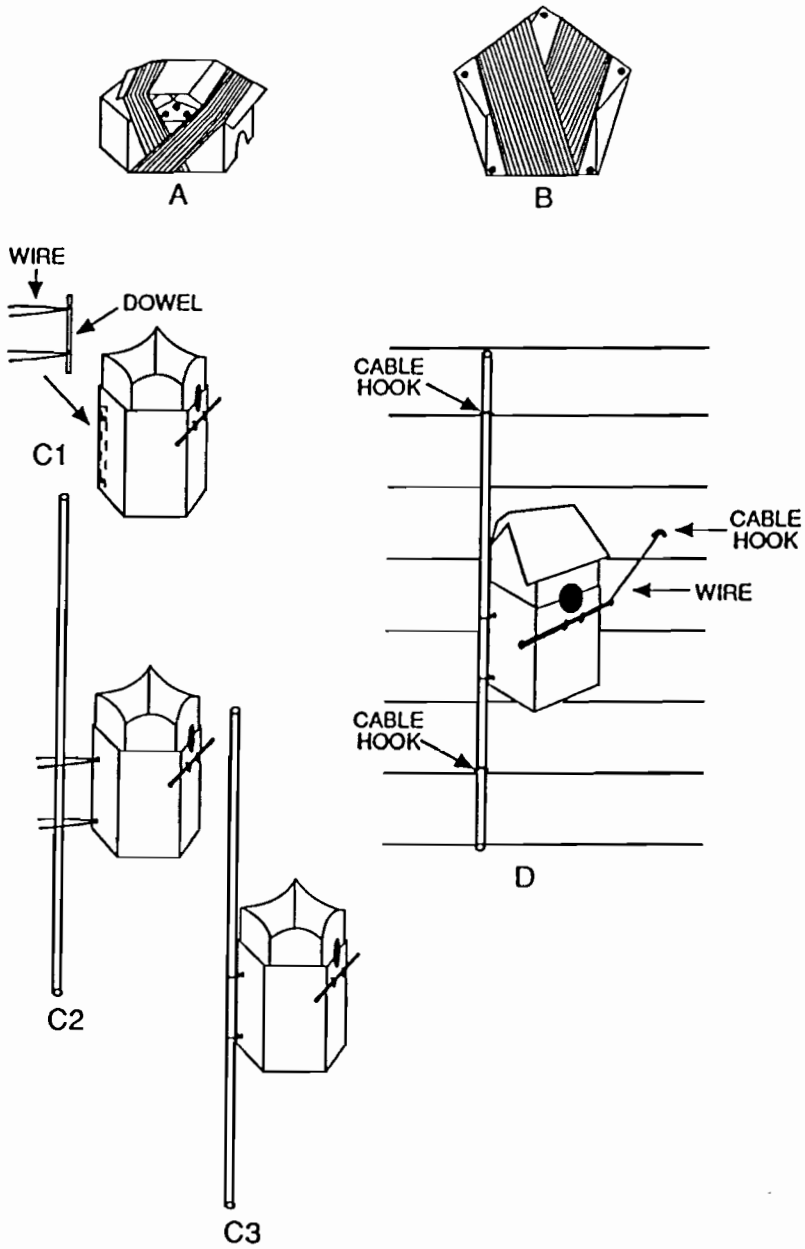

FIGURE 2. A. This side view of the roof shows placement of ventilation holes. B. This bottom view of the box shows placement of drainage holes. C. A wooden dowel (18-cm long, 0.8-cm dia.) with double wrapped wire is placed inside the nest box and strung through two holes (0.8-cm dia.) for attachment of the outside wooden dowel (240-cm long, 1-cm dia.). D. The nest box is hung on buildings by attaching the outside wooden dowel above and below the box. A wire can be used to secure the front of the box to prevent twisting in wind.

a four-carton pentagon that increased the volume of the box from approximately 1500 cm^3 to 2400 cm^3.

METHODS

The pentagon-shaped nest box had two cartons as an interior and two cartons as the exterior (Fig. 1). The entrance hole was cut with a 3.8-cm-diameter drill saw-bit. Duct tape (5 cm wide) was used to secure areas such as the floor and roof because staples did not hold well in these areas. Three 0.8-cm-diameter holes were drilled into two sides of the roof for ventilation and five holes into the floor for drainage (Figs. 2A, B). A 20-cm long, 0.8-cm-diameter wooden dowel was wired under the opening to provide a perch (Craven 1991). Nest boxes were spray-painted with a non-toxic, khaki-color paint and were attached to a wooden dowel to facilitate installation on buildings and other structures (Fig. 2).

From 10 to 15 Feb. 1990, 146 nest boxes were installed and left in place through the following winter so that both nesting and winter-roosting use of the boxes could be determined. During mid-February 1991, to accommodate objectives of a concurrent study, all 146 of the original nest boxes were removed and 120 were randomly reinstalled along with 60 new boxes. All boxes were monitored through 9 Sep. 1991.

RESULTS AND DISCUSSION

During 1990, none of the boxes had to be replaced. Some roofs needed additional reinforcement with duct tape, however, because the tape tended to slip on the waxy surface if not placed all the way under the edge of the roof (Fig. 1, F2). Some nest boxes in windy areas (generally on fences and corners of buildings) needed additional duct tape inside the lid to make a more secure fit. Of the 180 boxes used in 1991, eight of the 120 second-year boxes but none of the 60 first-year boxes required replacement. Four of the second-year boxes were ice- or water-saturated, two had holes torn in the bottom from the inside, one became weakened due to normal use and weathering, and one box had the opening enlarged, apparently by a fox squirrel (*Sciurus niger*). No additional boxes were damaged by mammalian predators, in part because most were inaccessible on building walls.

Nest boxes in this study withstood daily temperatures ranging from −27.2 to +42.2 C, relative humidities from 26% to 100%, average daily wind speeds up to 32 km per hour (gusts were often greater), and precipitation up to 14.8 cm in a day. Considering these conditions, it is not surprising that roofs of some nest boxes on corners of buildings, northern exposures, and fences needed to be retaped (approximately 35% of the boxes 1–2 times per year).

We built Fleming and Petit's (1986) two-carton and our four-carton boxes for comparisons. Each four-carton box took approximately 15 min to make and cost $1.20 (US), which was approximately three times longer and 1.7 times more expensive than the two-carton box.

In testing nest box suitability, we evaluated only those boxes not in-

cluded in other experiments (Pochop 1991). In 1990 and 1991, 51 of 73 and 48 of 60 boxes, respectively, were used for egg laying. House Sparrows laid 4.4 eggs per clutch in 1990 and 4.6 in 1991. Hatching success (ratio of eggs laid to nestlings hatched) was 50% in 1990 and 52% in 1991, whereas breeding success (ratio of eggs hatched to nestlings fledged) was 30% in 1990 and 34% in 1991.

The pentagon milk-carton nest box served the purposes of this study admirably. It was readily accepted by House Sparrows, withstood considerable weather extremes, and was inexpensive. Further, in 1991, eight of the nest boxes were in habitat suitable for use by other bird species and three of these were used by House Wrens (*Troglodytes aedon*). This nest box is suitable for field studies of House Sparrows and possibly other cavity-nesting birds that require or prefer a nest box of this size.

ACKNOWLEDGMENTS

We thank K. K. Kessler for project assistance, the State Climate Program at the University of Nebraska–Lincoln for climate data, and M. M. Beck, R. M. Case, M. O. Harrell, J. A. Savidge, and journal referees for manuscript reviews. This is Journal Series 9901 of the Agricultural Research Division, University of Nebraska–Lincoln.

LITERATURE CITED

CRAVEN, S. R. 1991. The other things that live in bird houses. Passenger Pigeon 53: 79–82.

FLEMING, W. J., AND D. R. PETIT. 1986. Modified milk carton nest box for studies of Prothonotary Warblers. J. Field Ornithol. 57:313–315.

INDYKIEWICZ, P. 1990. Nest-sites and nests of House Sparrow [*Passer domesticus* (L.)] in an urban environment. Pp. 95–121, *in* J. Pinowski and J. D. Summers-Smith, eds. Granivorous birds in the agricultural landscape. PWN-Polish Scientific Publishers, Warsaw, Poland.

IVANOV, B. E. 1987. Productivity due to reproduction of House Sparrow, *Passer domesticus* (L.), populations inhabiting animal farms. Ekol. Pol. 35:699–721.

NORTH, C. A. 1973. Population dynamics of the House Sparrow, *Passer domesticus* (L.), in Wisconsin, USA. Pp. 195–210, *in* S. C. Kendeigh and J. Pinowski, eds. Productivity, population dynamics and systematics of granivorous birds. PWN-Polish Scientific Publishers, Warsaw, Poland.

POCHOP, P. A. 1991. House Sparrow response to monofilament lines at nest boxes. M.S. thesis, University of Nebraska, Lincoln, Nebraska. 97 pp.

SALAET, M., AND P. J. CORDERO. 1988. A preliminary report on the breeding biology of the House Sparrow and Tree Sparrow (*Passer* spp.) in Barcelona, N. E. Spain. Publ. Dep. Zool. Barcelona 14:109–115.

Received 23 Mar. 1992; accepted 19 Oct. 1992.